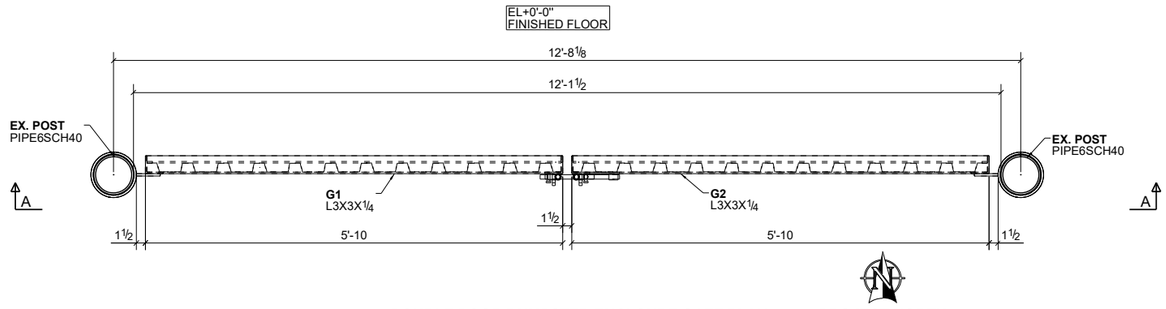

DOUBLE DOOR DUMPSTER ENCLOURE GATE PLAN
(REF.DRG.NO:A1)

PROJECT NORTH

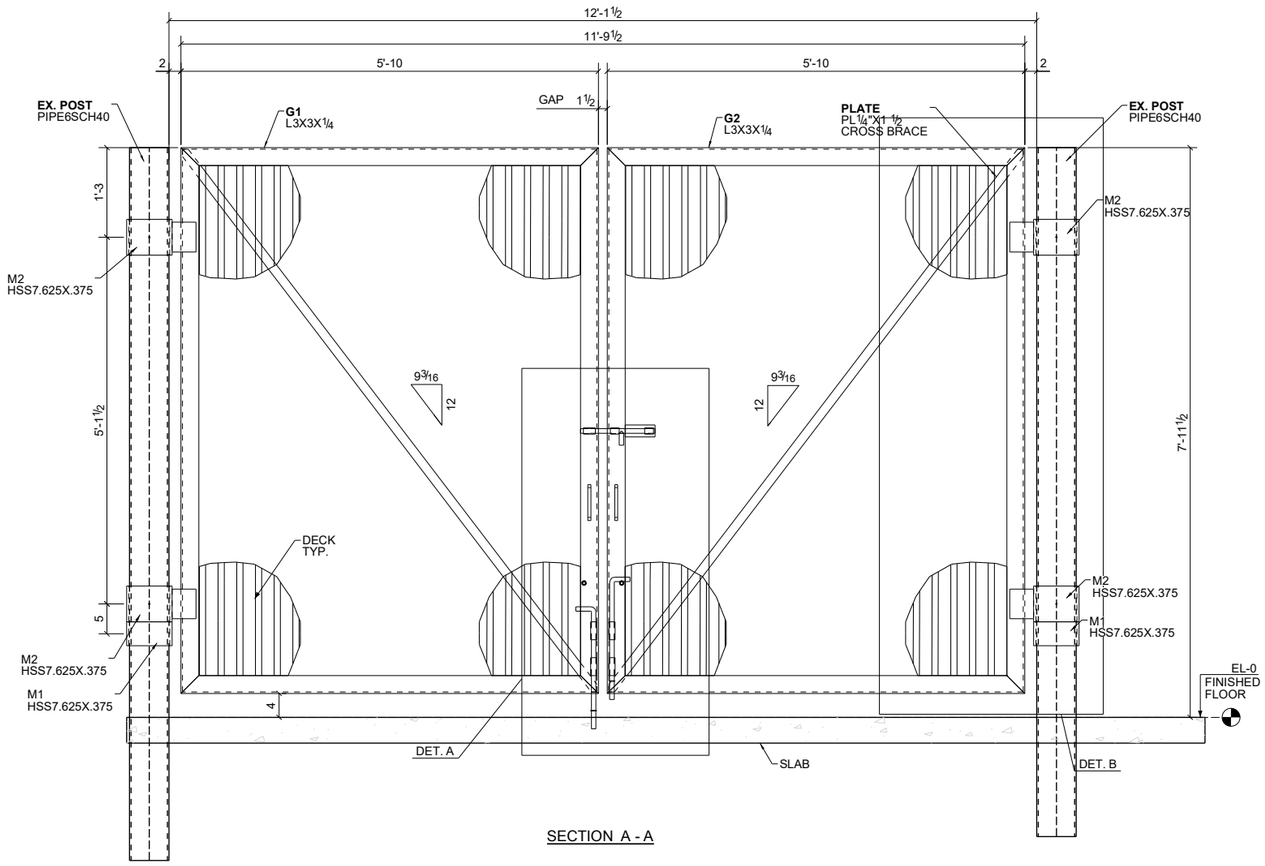

SECTION A - A

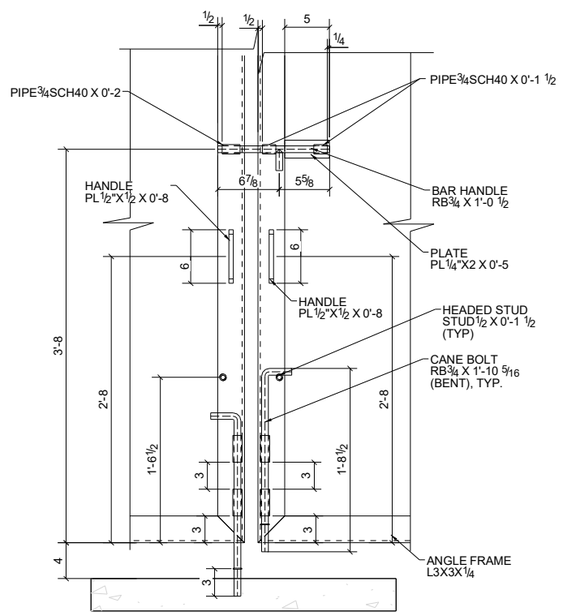

DETAIL A
DUMPSTER GATE DETAIL

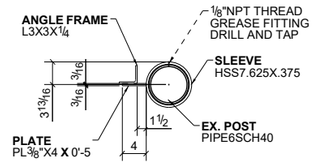

SECTION B - B

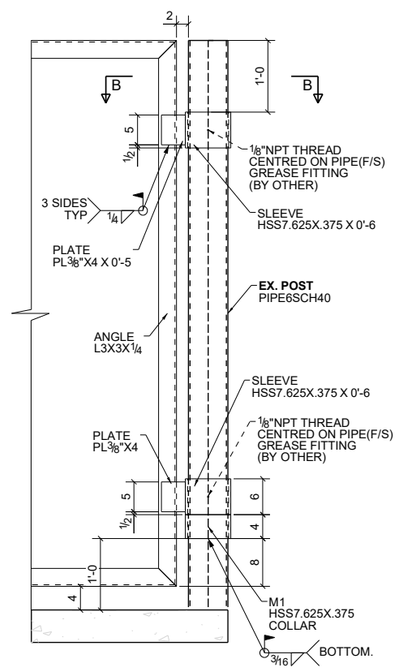

DETAIL B
COLLAR HINGE DETAIL

Tekla structures